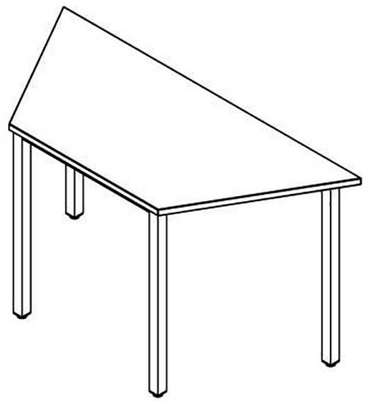

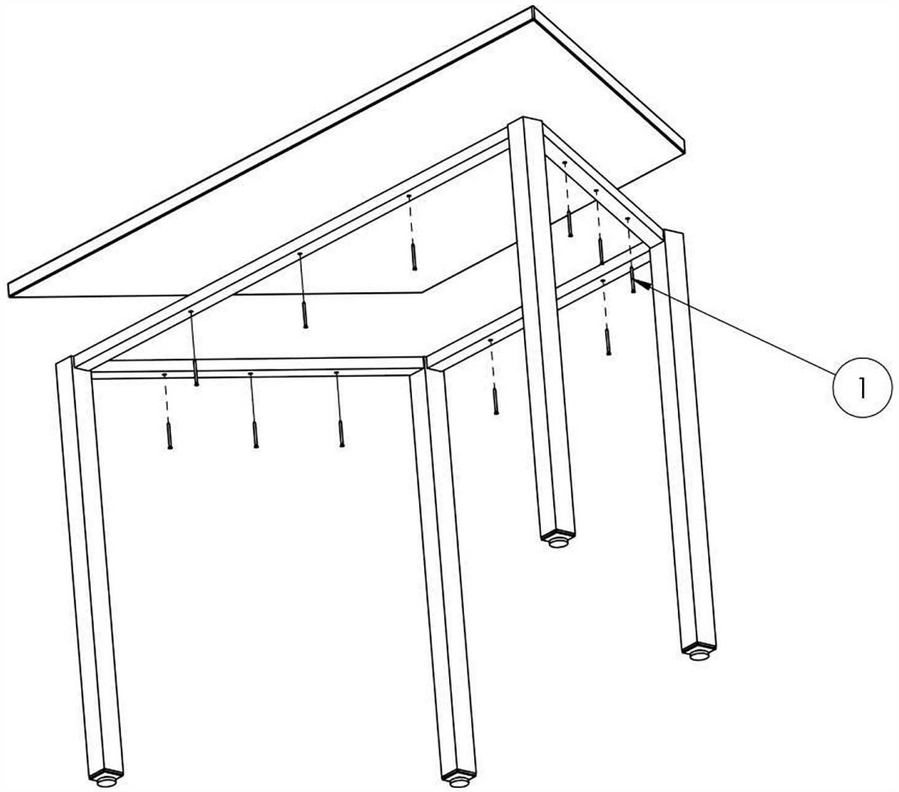

Serie Modular

Mesa Modular Trapecio

MESA MODULAR TRAPECIO

SOBRE SIN MECANIZAR

REF.	PIEZA	CANTIDAD
1	TORNILLO ROSCA MEDERA M6x45	12

HERRAJE

Ref. 1	Ref.	Ref.	Ref.	Ref.	Ref.	Ref.	Ref.	Ref.	Ref.

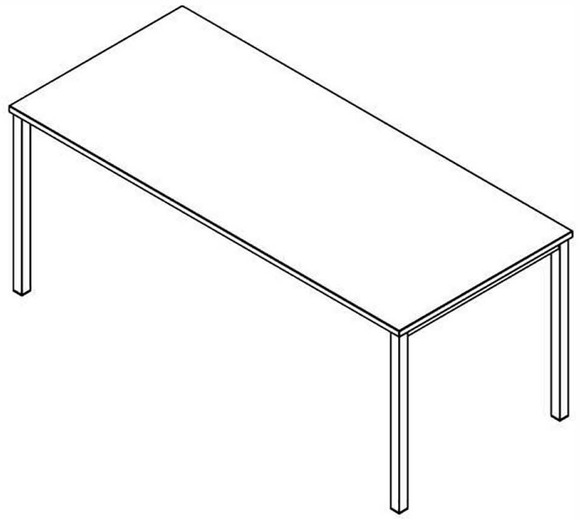

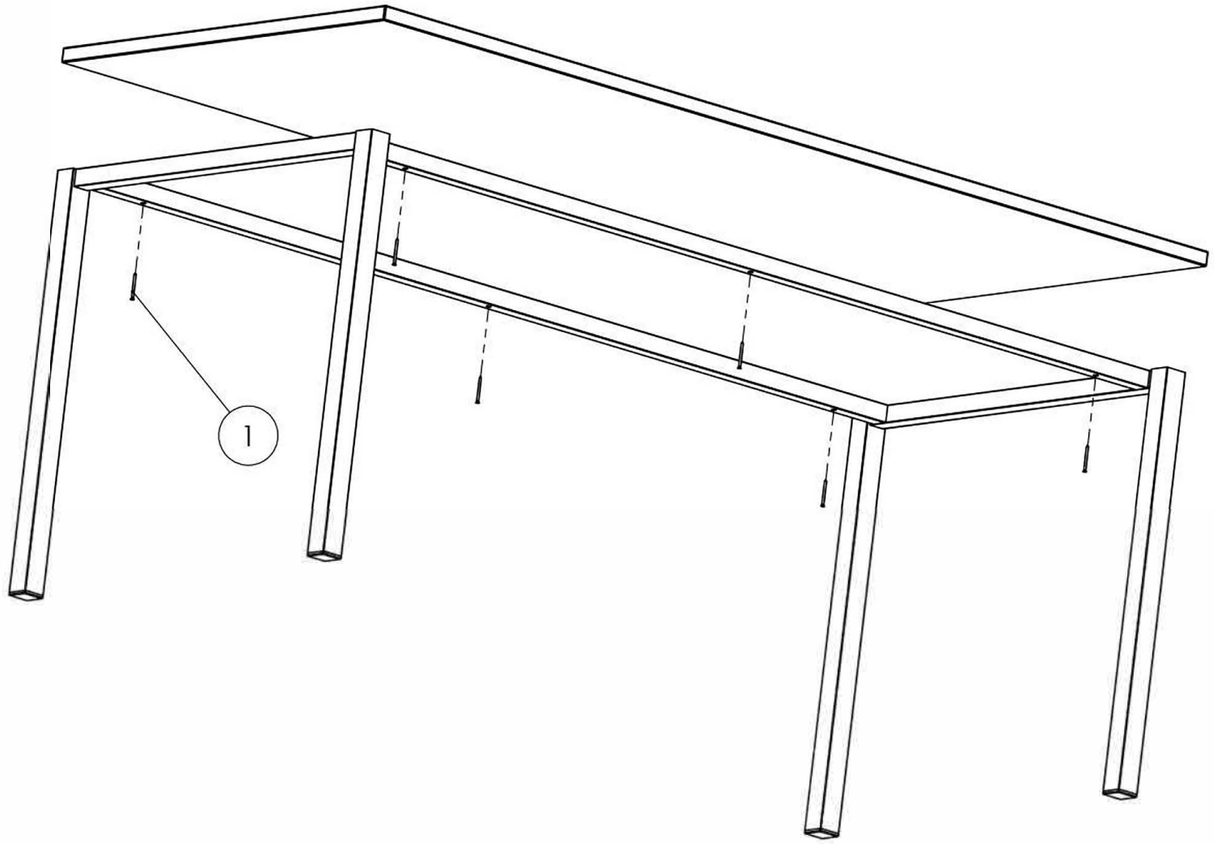

Serie Modular

Mesa Modular

REF.	PIEZA	CANTIDAD
1	TORNILLO ROSCA MADERA M6X45	6

HERRAJE

Ref. 1 | Ref. | Ref. | Ref. | Ref. | Ref. | Ref. | Ref. | Ref. | Ref.